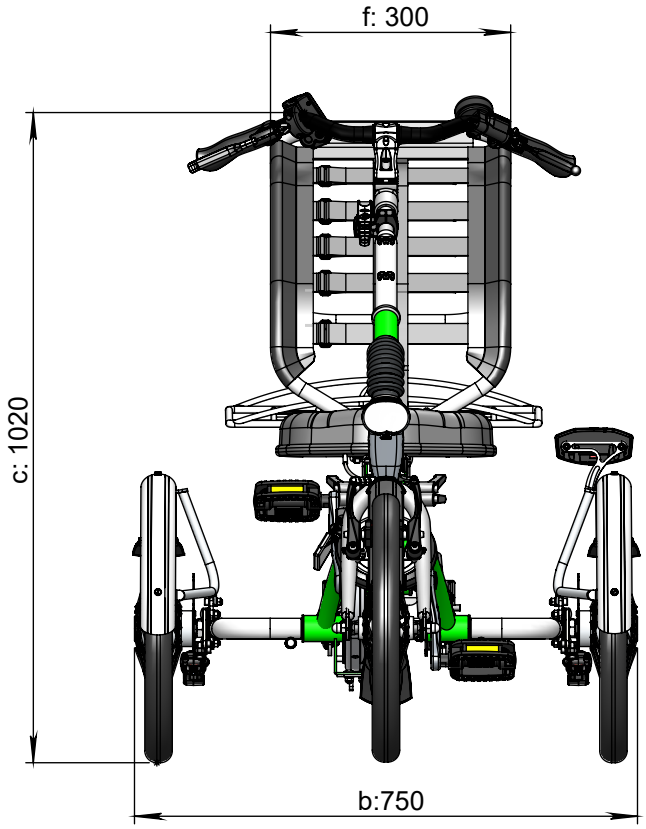

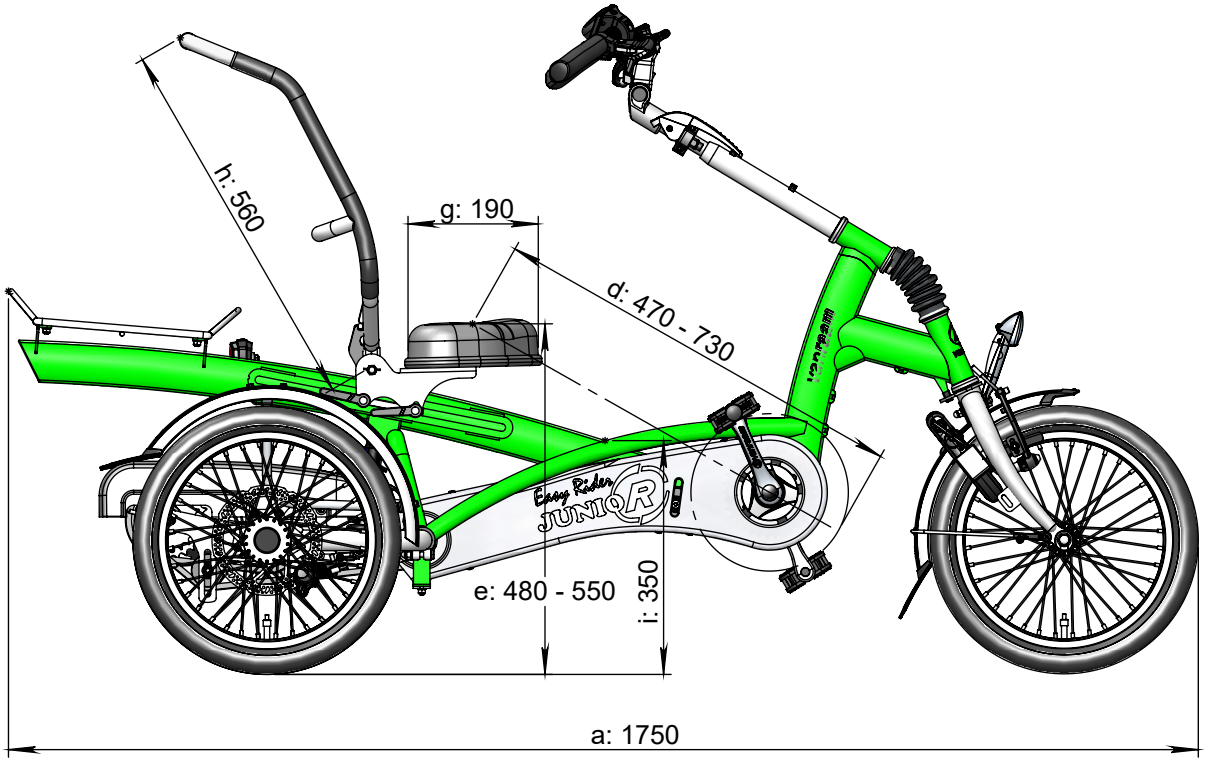

Standard frame size
turning circle = 2,8 m
a = maximum lenght 1750 mm
b = maximum width 750 mm
c = height 1020 mm
d = inseam 470 - 730 mm
e = seat height 480 mm - 550 mm
f = seat width 300 mm
g = seat depth 190 mm
h = backrest height 560 mm
i = standover height 350 mm